AUGER HOUSING / IMPELLER ASSEMBLY

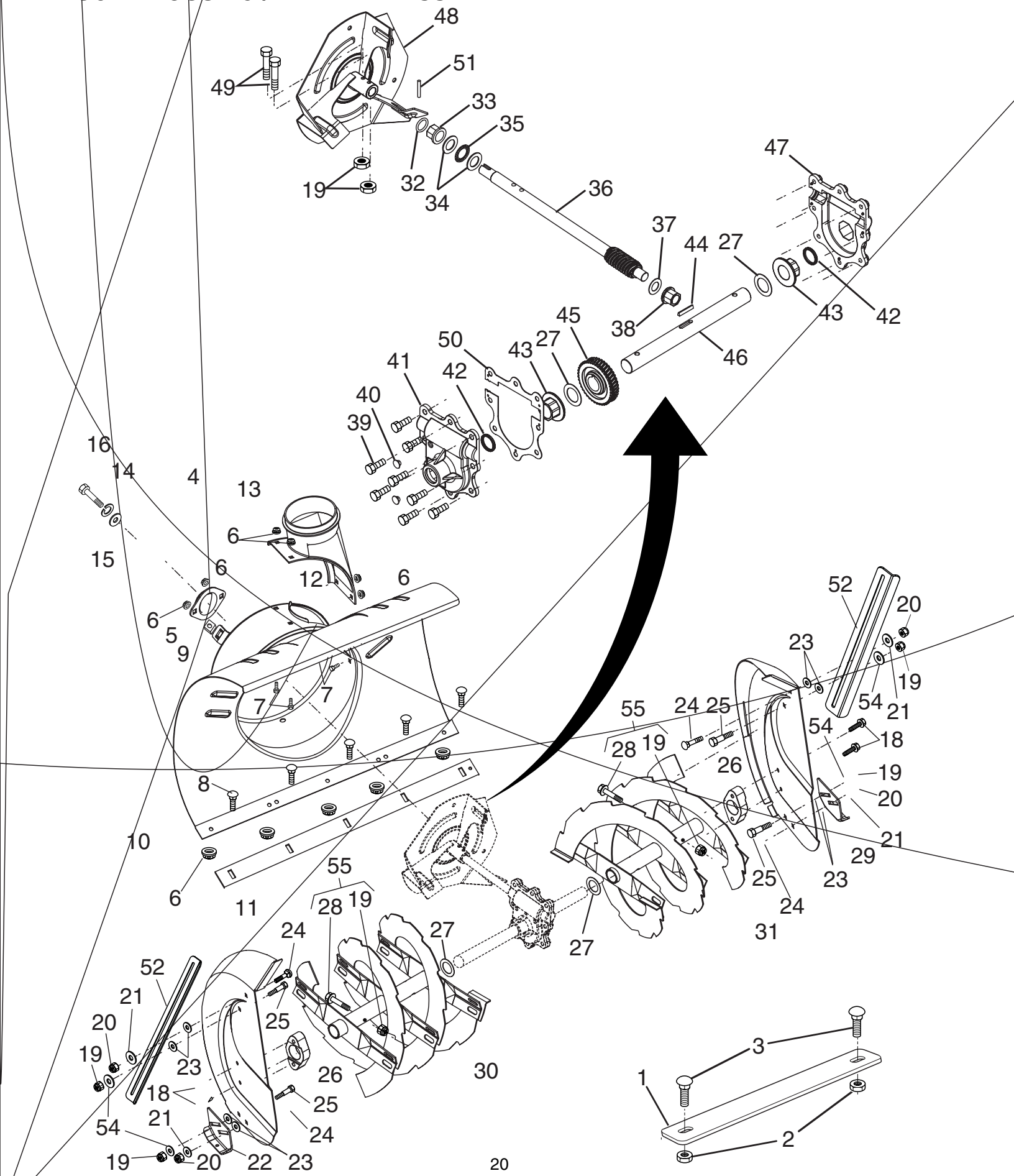

AUGER HOUSING / IMPELLER ASSEMBLY

KEY NO.	PART NO.	DESCRIPTION
1	182516X007	Bar, Weight
2	166785	Nut, Hex
3	72110510	Bolt, Carriage
4	191079	Pulley, Impeller
5	188909	Bearing Assembly, Flange
6	155377	Nut, Hex Flange 5/16-18
7	180355	Bolt, Flat Head, Carriage 5/16-18 x 5/8
8	72270505	Bolt, Carriage 5/16-18 x 5/8
9	178820	Nut, Cage 3/8-16
10	178827X428	Housing, Auger
11	178691X479	Bar, Scraper
12	178675X008	Bracket, Corner Discharge
13	175322	Base, Discharge Chute
14	19111507	Washer, Flat
15	10040500	Washer, Lock 5/16
16	74950512	Screw, Hex Head 5/16-18 x 3/4
18	179582	Screw, Hex Head 5/16 x 1
19	73800400	Nut, Hex Lock 1/4-20
20	73800500	Nut, Hex Lock 5/16-18
21	155415	Washer, Flat 5/16
22	178777X479	Skid Plate, RH
23	179246	Washer, Nylon, Friction
24	72270506	Bolt, Carriage 5/16-18 x 3/4
25	185600	Bolt, Shoulder 1/4-20
26	174658	Bearing, Auger
27	174697	Washer, Thrust, 1"
28	192090	Bolt, Shear
29	174762X479	Skid Plate, LH
30	192125X479	Auger Assembly, RH
31	192123X479	Auger Assembly, LH
32	174699	O-Ring
33	174700	Bushing, Flange 3/4
34	174681	Washer, Thrust 3/4
35	174684	Bearing, Thrust 3/4
36	174660	Shaft, Impeller
37	174683	Washer, Thrust 5/8
38	174686	Bushing, Flange 5/8
39	150078	Screw, Hex Head 5/16-18 x 3/4
40	86447	Plug, Case
41	174688	Housing, Gearbox, RH
42	174698	Seal, Oil
43	174701	Bushing, Flange, 1"
44	189282	Key, Square 1/4 x 1/4 x 7/8
45	174659	Gear, Worm
46	174657	Shaft, Auger
47	174687	Housing, Gearbox, LH
48	175321X479	Impeller Assembly
49	74780426	Screw, Hex Head 1/4-20 x 1-5/8
50	175311	Gasket, Gearbox
51	7836M	Pin, Roll 3/16 x 1-1/8
52	181160X479	Bar, Drift Cutter
54	53847	Washer, Flat 1/4
55	188243	Kit, Shear (Contains 6 each of Key Numbers 19 and 28)

NOTE: All component dimensions given in U.S. inches
1 inch = 25.4 mm

CONTROL PANEL / DISCHARGE CHUTE

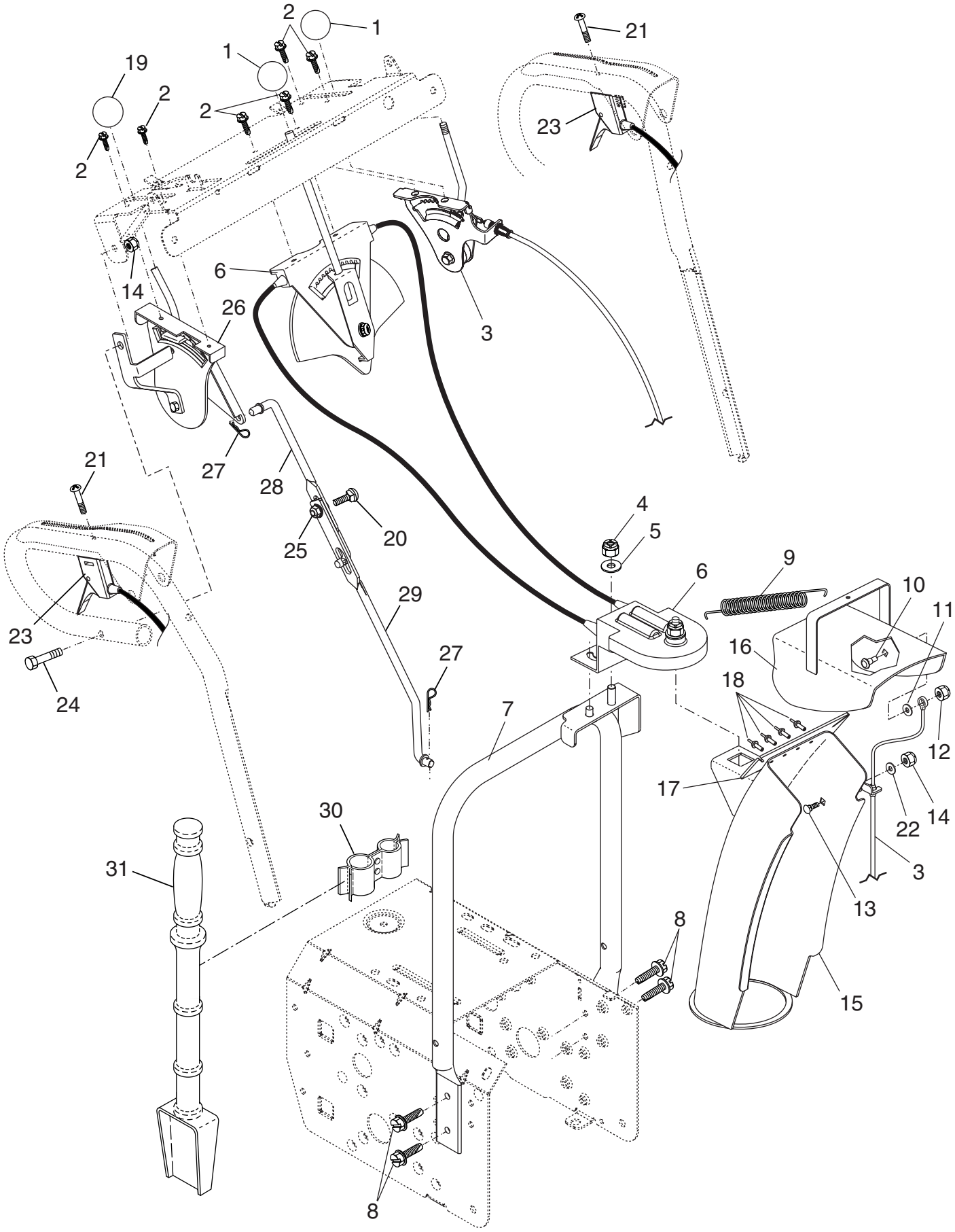

CONTROL PANEL / DISCHARGE CHUTE

KEY NO.	PART NO.	DESCRIPTION
1	183334	Knob, Lever
2	17501010	Screw #10-24 x 5/8
3	178674	Control Assembly, Deflector
4	73800600	Nut, Lock 3/8-16
5	19131316	Washer, Flat 3/8
6	178659	Control Assembly, Chute Rotater
7	178638X479	Support, Pivot
8	150078	Screw, Hex Head 5/16-18 x 3/4
9	184505	Spring, Deflector
10	179829	Bolt, Shoulder
11	179246	Washer, Friction, Nylon
12	73800400	Nut, Lock 1/4-20
13	72250505	Bolt, Carriage 5/16-18
14	73800500	Nut, Lock 5/16-18
15	178628X428	Chute Assembly
16	178633X428	Deflector Assembly
17	179145	Seal, Deflector
18	128415	Rivet, Blind
19	183333	Knob, Speed Control Lever
20	72270506	Bolt, Carriage 5/16-18 x 3/4
21	74041024	Screw #10-24 x 1-1/2
22	155415	Washer, Flat
23	188303	Control Assembly, Power Steering
24	74780528	Screw, Hex Head 5/16-18 x 1-3/4
25	155377	Nut, Lock 5/16-18
26	179257	Lever Assembly, Speed Control
27	169675	Retainer, Hairpin
28	180445	Rod, Upper, Speed Control
29	187716	Rod, Lower, Speed Control
30	192710	Clamp, Clean-Out Tool
31	192199	Tool, Clean-Out

NOTE: All component dimensions given in U.S. inches
1 inch = 25.4 mm

HANDLES

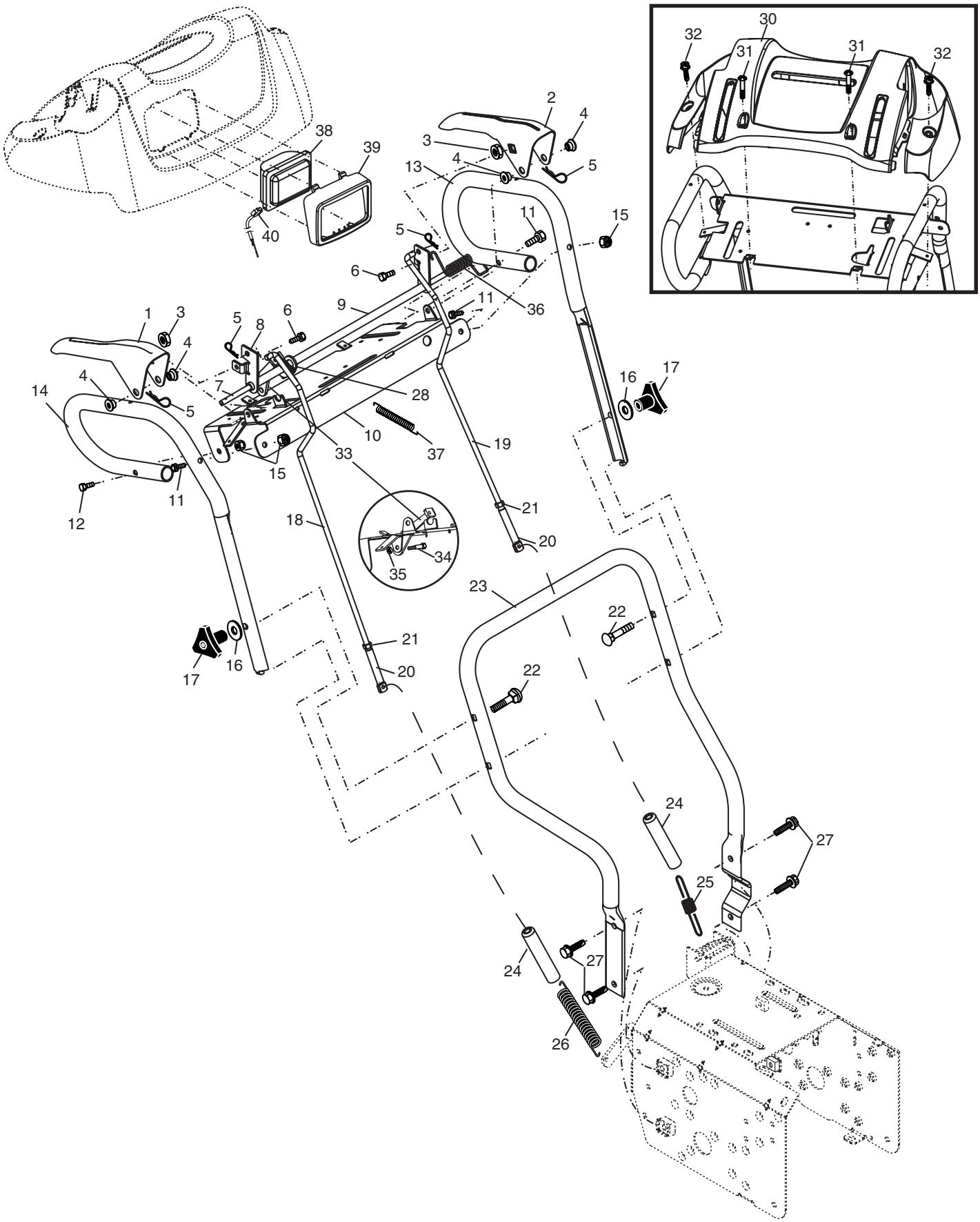
30
32
31
31
32
2
4
38
39
3
4
5
13
11
15
40
5
6
36
11
9
1
3
5
8
6
4
4
7
28
16
17
14
5
10
37
19
33
15
11
12
21
18
20
34
35
23
22
21
16
17
20
22
24
27
25
24
27
26

HANDLES

KEY NO.	PART NO.	DESCRIPTION
1	178875X479	Lever, Auger Control, RH
2	178648X479	Lever, Traction Drive Control, LH
3	179439	Nut, Cage 1/4-20
4	178888	Bushing, Flange
5	169675	Retainer, Hairpin
6	180402	Screw, Hex Head 1/4-20 x 3/4
7	178652	Rod, Interlock
8	184003	Tube Assembly, Interlock, RH
9	178651	Tube Assembly, Interlock, LH
10	178645X479	Panel, Control
11	74780524	Screw, Hex Head 5/16-18 x 1-1/2
12	74780528	Screw, Hex Head 5/16-18 x 1-3/4
13	178646X479	Handle Tube, LH
14	178696X479	Handle Tube, RH
15	73800500	Nut, Lock 5/16-18
16	19131316	Washer, Flat 3/8
17	178899	Knob, Handle
18	184594	Rod, Auger Control
19	193081	Rod, Traction Control
20	180428	End, Control Rod
21	73350500	Nut, Hex, Jam 5/16-18
22	72120618	Bolt, Carriage 3/8-16 x 2-1/4
23	178643X479	Handle Tube, Lower
24	180447	Sleeve, Spring
25	180926	Spring, Traction Drive
26	178669	Spring, Auger Control
27	71210616	Screw, Hex Head 3/8-16 x 1
28	180494	Clip, Panel
30	182906	Console, Panel
31	175262	Screw, Hex Head, Tapping #10-24 x 1-1/4
32	184471	Screw, Hex Head, Tapping #10-24 x 1/2
33	175339X008	Latch, Interlock
34	183518	Bolt, Shoulder
35	68038	Nut, Lock 1/4-20
36	178831	Spring, Torsion
37	178658	Spring, Interlock
38	178666	Headlight, Halogen
39	178668	Bezel, Headlight
40	180964	Harness, Headlight (Halogen)

NOTE: All component dimensions given in U.S. inches
1 inch = 25.4 mm

DRIVE

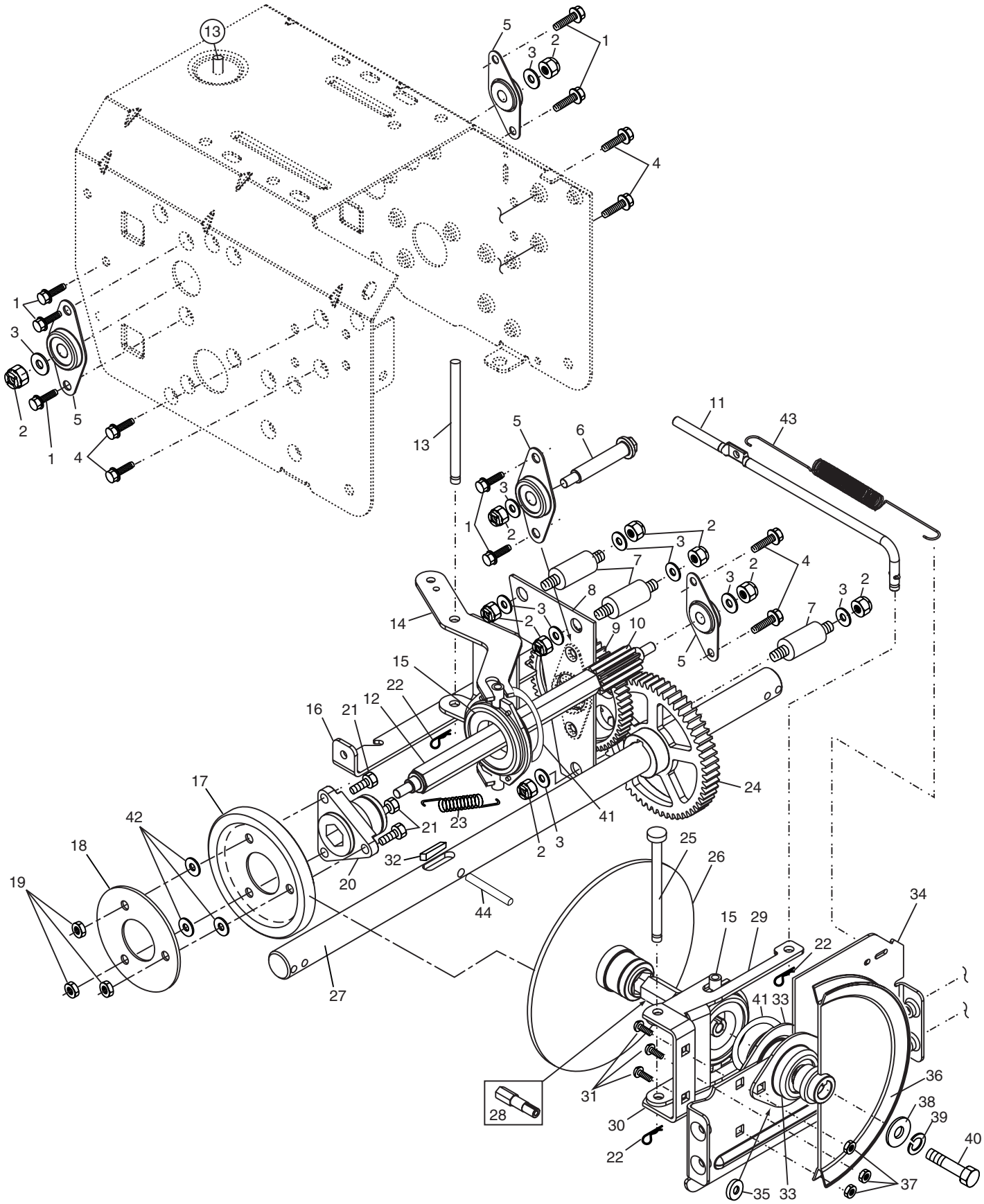
13
5
2
3
1
4
1
3
2
5
1
4
13
5
6
11
43
1
2
3
2
7
4
2
3
2
3
7
8
14
3
2
9
10
5
15
22
12
16
21
24
17
42
21
23
41
18
2
3
25
32
26
19
20
44
34
15
29
22
27
41
33
31
36
28
38
39
30
40
22
35
33
37

DRIVE

KEY NO.	PART NO.	DESCRIPTION
1	146315	Screw, Hex Head 5/16-18 x 5/8
2	73800500	Nut, Lock 5/16-18
3	155415	Washer, Flat
4	17490508	Screw, Hex Head 5/16-18 x 1/2
5	180017	Bearing, Flange
6	180134	Shaft, Auxiliary
7	179270	Spacer, Plate
8	192616X479	Plate, Auxiliary
9	180082	Gear, Intermediate (12/58)
10	180065	Gear, Pinion
11	187714	Rod, Clutch
12	180066	Shaft, Long, Hex
13	178807	Pin, Pivot
14	178619X479	Lever, Shifter / Wheel
15	175344	Trunnion Bearing Assembly
16	186951X479	Bracket, Pivot, Shift
17	179831	Ring, Rubber Wheel
18	178616X479	Plate, Rubber Wheel
19	73930500	Nut, Lock 5/16-18
20	178613	Hub, Rubber Wheel
21	74760514	Screw, Hex Head 5/16-18 x 7/8
22	85179	Retainer, Hairpin
23	180135	Spring, Bias
24	180081	Gear, Axle (58 Teeth)
25	178695	Pin, Pivot Lever
26	175341	Plate Assembly, Drive
27	178621	Shaft, Axle
28	175340	Shaft, Short Hex
29	175350X479	Lever, Shifter Plate
30	175349X479	Bracket, Shifter Support
31	72270505	Bolt, Carriage 5/16-18 x 5/8
32	178879	Key, Square 1/4 x 1/4 x 7/8
33	188909	Bearing, Flange
34	175338X479	Plate, Drive Mounting
35	182504	Spacer, Bearing
36	191080	Pulley, Traction Drive
37	155377	Nut, Lock 5/16-18
38	19111507	Washer, Flat
39	10040500	Washer, Lock 5/16
40	74950512	Screw, Hex Head 5/16-18 x 3/4
41	12000012	Ring, Retaining
42	**155415**	Washer .20 x 8.5 x 2.0
43	179095	Spring, Return
44	9465M1	Pin, Roll

NOTE: All component dimensions given in U.S. inches
1 inch = 25.4 mm

CHASSIS / ENGINE / PULLEYS

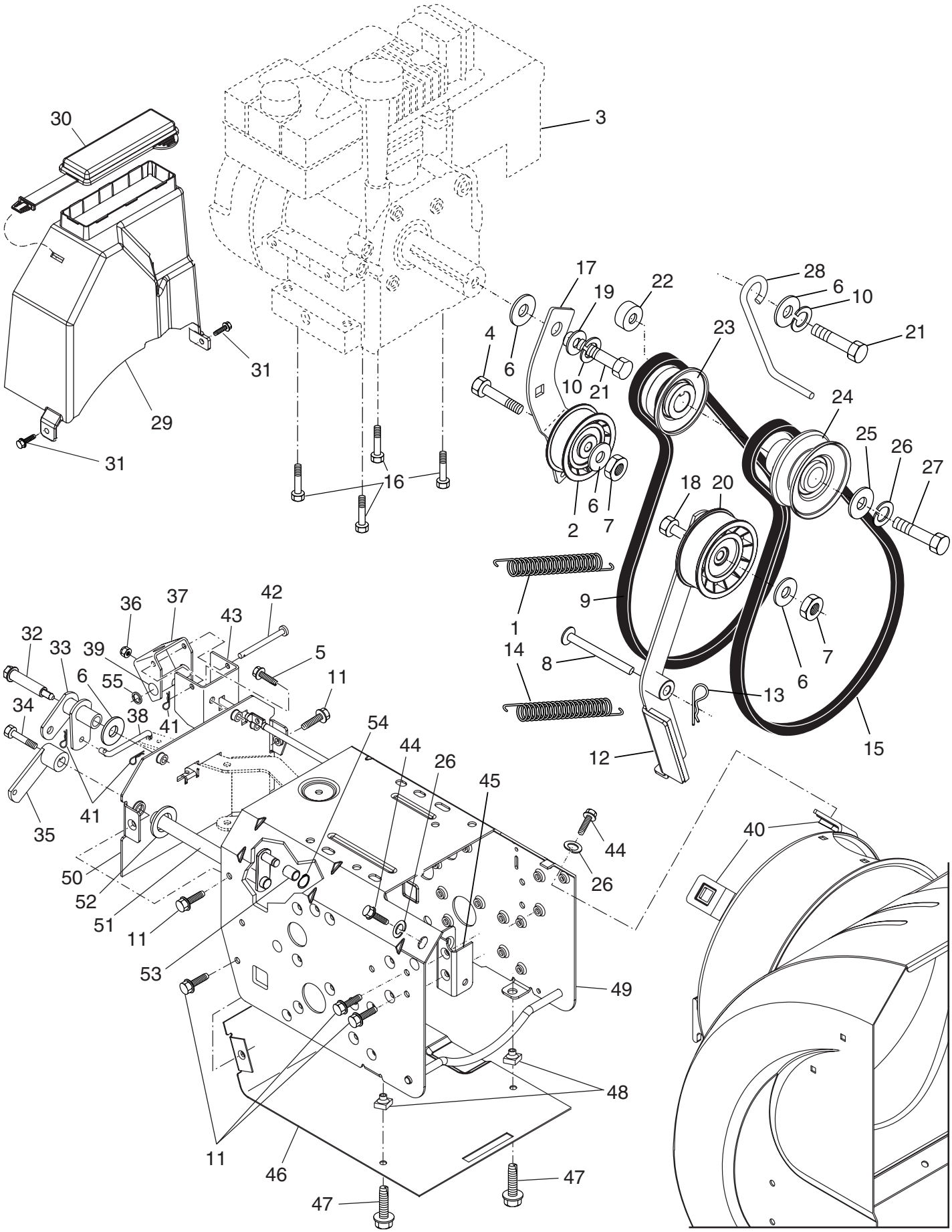

CHASSIS / ENGINE / PULLEYS

KEY NO.	PART NO.	DESCRIPTION
1	181044	Spring, Traction Idler
2	180522	Pulley, Idler (2-1/4)
3	- - -	Engine, Tecumseh, Model Number OH318SA (Order parts from Engine manufacturer)
4	74780520	Screw, Hex Head 5/16-18 x 1-1/4
5	150078	Screw, Hex Washer Head 5/16-18 x 3/4
6	59289	Washer, Flat
7	73930500	Nut, Jam, Lock 5/16-18
8	175330	Pin, Idler Pivot
9	179092	V-Belt, Traction Drive
10	10040500	Washer, Lock 5/16
11	**17490508**	Screw, Hex Washer Head 5/16-18 x 1/2
12	179259	Impeller Idler Arm Assembly
13	85179	Retainer, Hairpin
14	178828	Spring, Brake
15	183533	V-Belt, Impeller Drive
16	192306	Screw, Hex Head 3/8-16 x 1-1/4
17	179354X008	Arm, Idler
18	74780524	Screw, Hex Head 5/16-18 x 1-1/2
19	175331	Bushing, Idler Pivot
20	180523	Pulley, Idler (2-3/4)
21	74610516	Screw, Hex Head 5/16-24 x 1
22	179371	Spacer, Engine Pulley
23	180478	Pulley, Engine, Traction Drive
24	179157	Pulley, Engine, Impeller Drive
25	62735	Washer, Flat 3/8
26	850263	Washer, Lock, Helical
27	851084	Screw, Hex Head 3/8-24 x 1-3/8
28	155452	Guide, Belt
29	192193	Cover, Belt
30	178830	Cover, Toolbox
31	17490408	Screw, Hex Head 1/4-20 x 1/2
32	179256	Bolt, Shoulder 5/16-18
33	187853	Bellcrank Shifter
34	180401	Screw, Hex Head 1/4-28 x 3/4
35	179240	Arm, Auger Control
36	73800500	Nut, Lock 5/16-18
37	178833X479	Bellcrank Assembly
38	187101	Link, Speed Control
39	192110	Trunnion, Clutch
40	178890	Nut, Cage 3/8-16
41	700279	Hairpin, Cotter 3/32 x 1/2
42	179065	Pin, Bellcrank
43	179063X479	Bracket, Bellcrank
44	74780624	Screw, Hex Head 3/8-16 x 1-1/2
45	175324X479	Pivot Bracket, Impeller Idler Arm
46	178624X479	Pan, Frame Bottom
47	71020512	Screw, Hex Head 5/16-18 x 3/4
48	181156	Nut, Speed 5/16-18
49	183852X428	Frame Assembly
50	187715X428	Plate, Frame End
51	192463X008	Shaft, Auger Control
52	57079	Washer, Hardened
53	192275	Roller
54	192147	Ring, Crescent
55	12000002	E-Ring
- -	183854	Power Cord (not shown)

NOTE: All component dimensions given in U.S. inches.
1 inch = 25.4 mm

WHEELS / DECALS

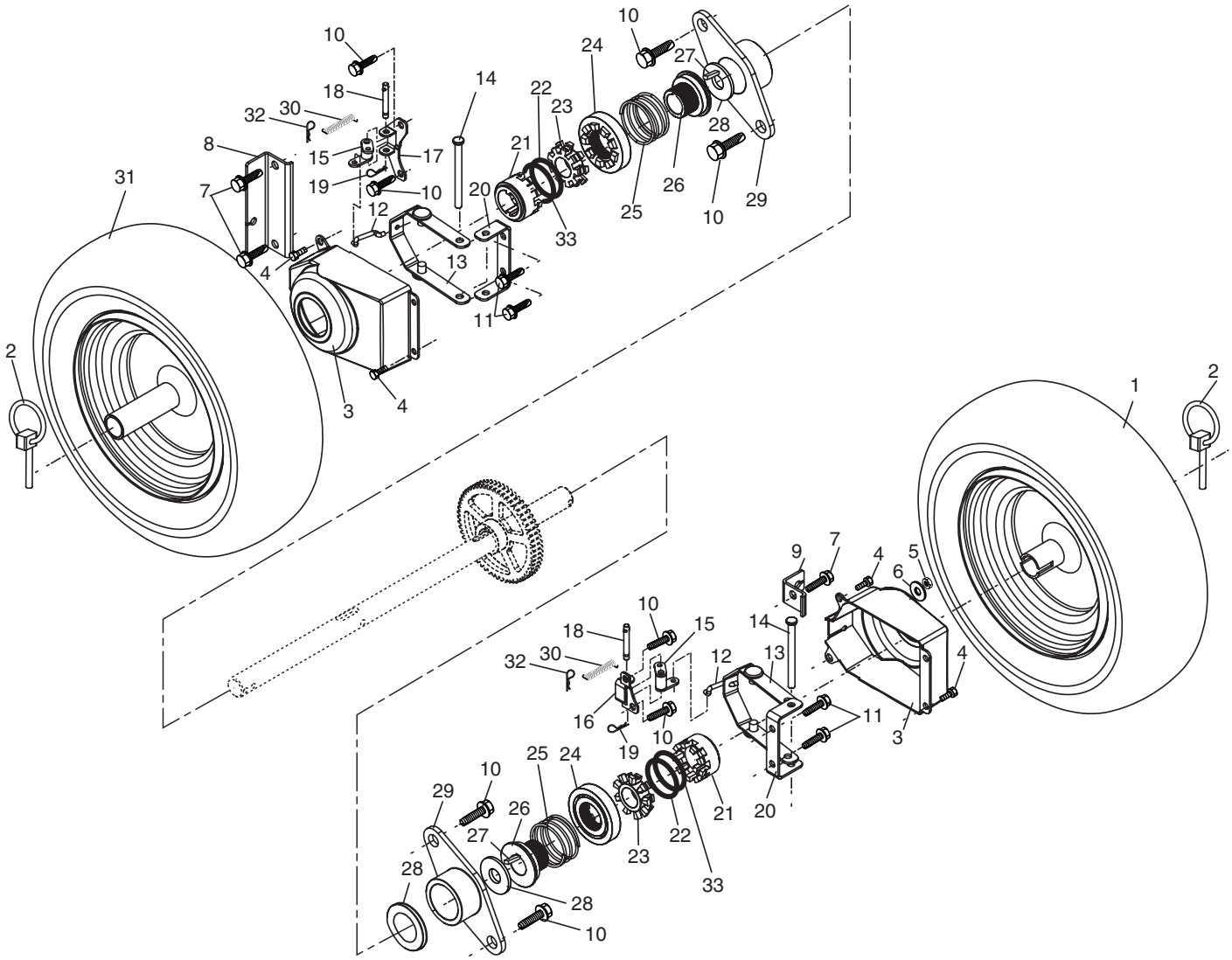

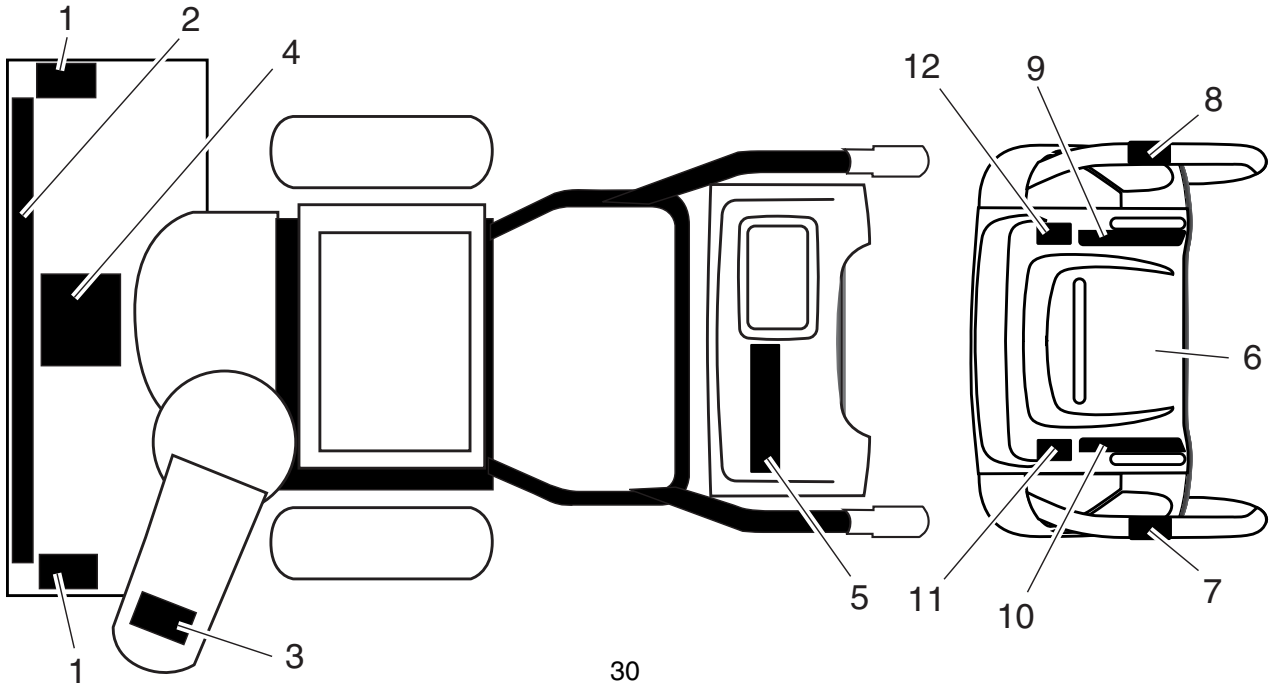

WHEELS / DECALS

KEY NO.	PART NO.	DESCRIPTION
1	187872	Wheel Assembly, 16", Power Steering, LH
2	155443	Pin, Klik 1/4
3	192109	Cover, Power Steering
4	184471	Shoulder Bolt, Hex Head #10-24 x 1/2
5	73800500	Nut, Lock 5/16-18
6	155415	Washer, Flat 5/16
7	71210616	Screw, Hex Head 3/8-16 x 1
8	185603X479	Bracket, Steer Cable RH
9	185602X479	Bracket, Steer Cable LH
10	146315	Screw, Hex Head 5/16-18 x 5/8
11	17490508	Screw, Hex Head 5/16-18 x 1/2
12	184393	Link, Steering Lever
13	185403X479	Yoke, Steering
14	182015	Pin, Steering Lever
15	184361X008	Bellcrank
16	181982	Bracket Assembly, LH Steering
17	182063	Bracket Assembly, RH Steering
18	181847	Pin, Steering Bellcrank
19	85179	Retainer, Hairpin
20	179148X479	Bracket, Steering
21	179141	Driver, Wheel
22	182466	Ring, Wire Retainer
23	187622	Lobe, Wheel
24	187623	Slide, Clutch
25	179139	Spring, Clutch Slide
26	179137	Lobe, Axle
27	178879	Key, Square 1/4
28	174697	Washer, Thrust (1")
29	179830	Bearing, Axle
30	184453	Spring, Return
31	187874	Wheel Assembly, 16", Power Steering, RH
32	700279	Clip, Retainer
33	12000045	Ring, Retaining

KEY NO.	PART NO.	DESCRIPTION
1	181037	Decal, Danger
2	187867	Decal, Poulan Pro, 11HP/30" (large)
3	181035	Decal, Danger, Deflector
4	181042	Decal, Danger
5	187892	Decal, Poulan Pro, 11HP/30" (small)
6	181033	Decal, Instruction
7	155798	Decal, Traction Lever
8	155800	Decal, Auger Lever
9	181039	Decal, Speed Control
10	183730	Decal, Remote Deflector
11	183907	Decal, LH Trigger
12	183905	Decal, RH Trigger
- -	192046	Owner's Manual, English
- -	192047	Owner's Manual, French

NOTE: All component dimensions given in U.S. inches
1 inch = 25.4 mm