MODEL 461004x92A

REPAIR PARTS
SEAT DECK

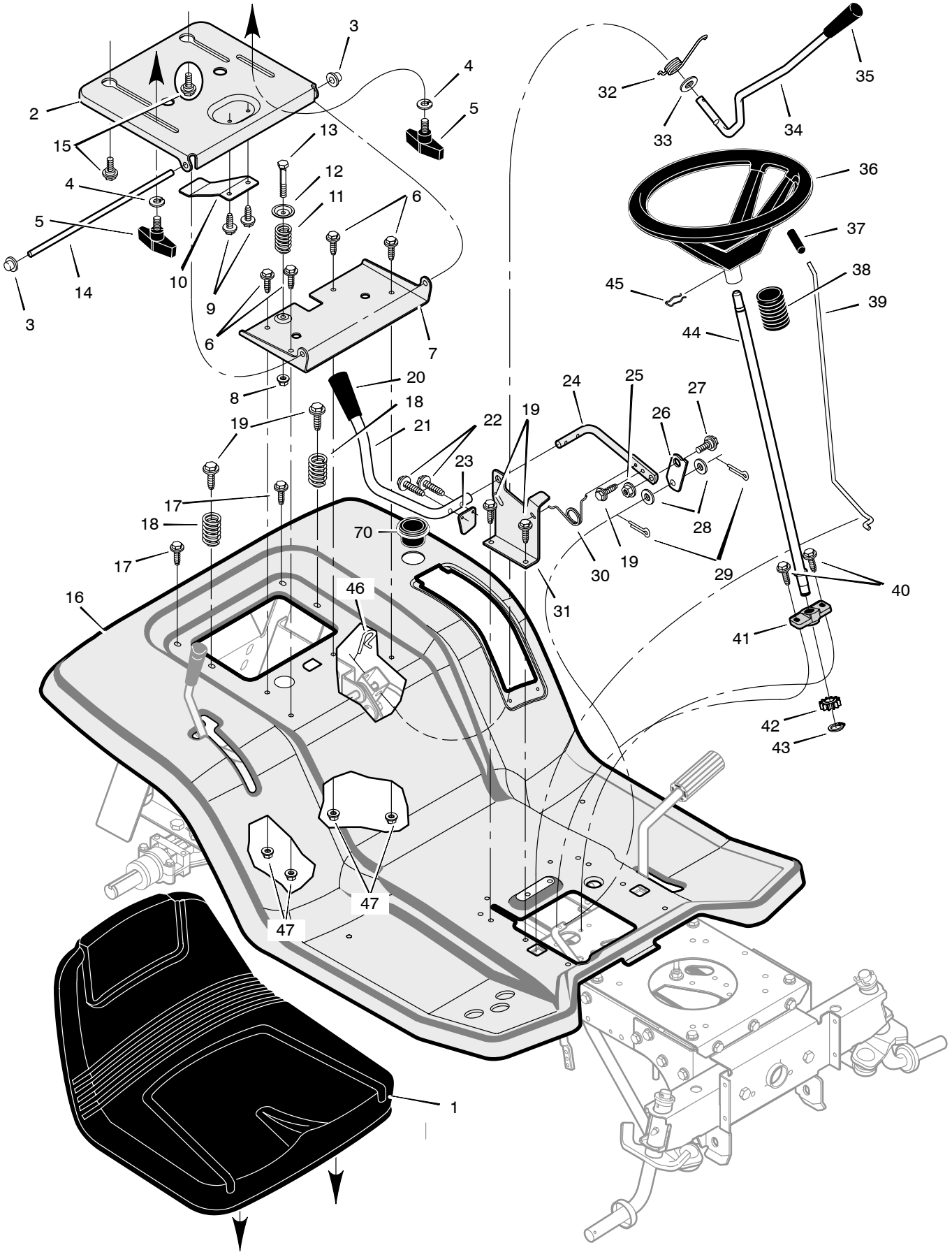

MODEL 461004x92A

REPAIR PARTS
SEAT DECK

Key No.	Part No.	Description
1	1001028	Seat
2	094154E701	Support, Seat
3	028x23	Push–On Cap
4	017x47 Z	Washer
5	1001054	Bolt, Wing
6	001x45	Bolt
7	1001648E700	Bracket, Pivot
8	015X89	Nut
9	26x229	Screw
10	094057	Spring, Leaf
11	164x31	Spring
12	094155 Z	Washer, Cup
13	009x55	Bolt
14	094156 Z	Rod, Pivot
15	009x56	Bolt, Shoulder
16	1001555E700	Deck, Seat
17	26x263	Screw
18	164x30	Spring
19	26x249	Screw
20	092698	Grip
21	094100 Z	Handle, PTO
22	0025x3	Screw
23	094022 Z	Paddle, Switch
24	094017 Z	Lever, PTO
25	015x84	Nut
26	094004 Z	Link, PTO
27	009x39	Shoulder, Bolt
28	017x57	Washer
29	030x20	Pin, Cotter
30	166x39	Spring
31	094018E701	Bracket, PTO
32	166x40	Spring
33	17x103	Washer
34	690533	Handle, Lift
35	092697	Grip
36	094591	Wheel, Steering
37	091079	Grip
38	092059	Bellows
39	1001245 Z	Rod, Parking Brake
40	26x267	Screw
41	094124	Bearing, Lower
42	690183	Gear, Pinion
43	011x25	Retainer
44	690625	Shaft, Steering
45	094131	Clip, Retainer *
46	0031x4	Pin, Cotter
47	15x123	Nut
70	1001542	Holder, Beverage
—	095027	Parts Bag, Assy
—	F–040741L	Manual and Parts List

* NOTE: This part included with key 36.

MODEL 461004x92A

REPAIR PARTS
HOOD AND DASH

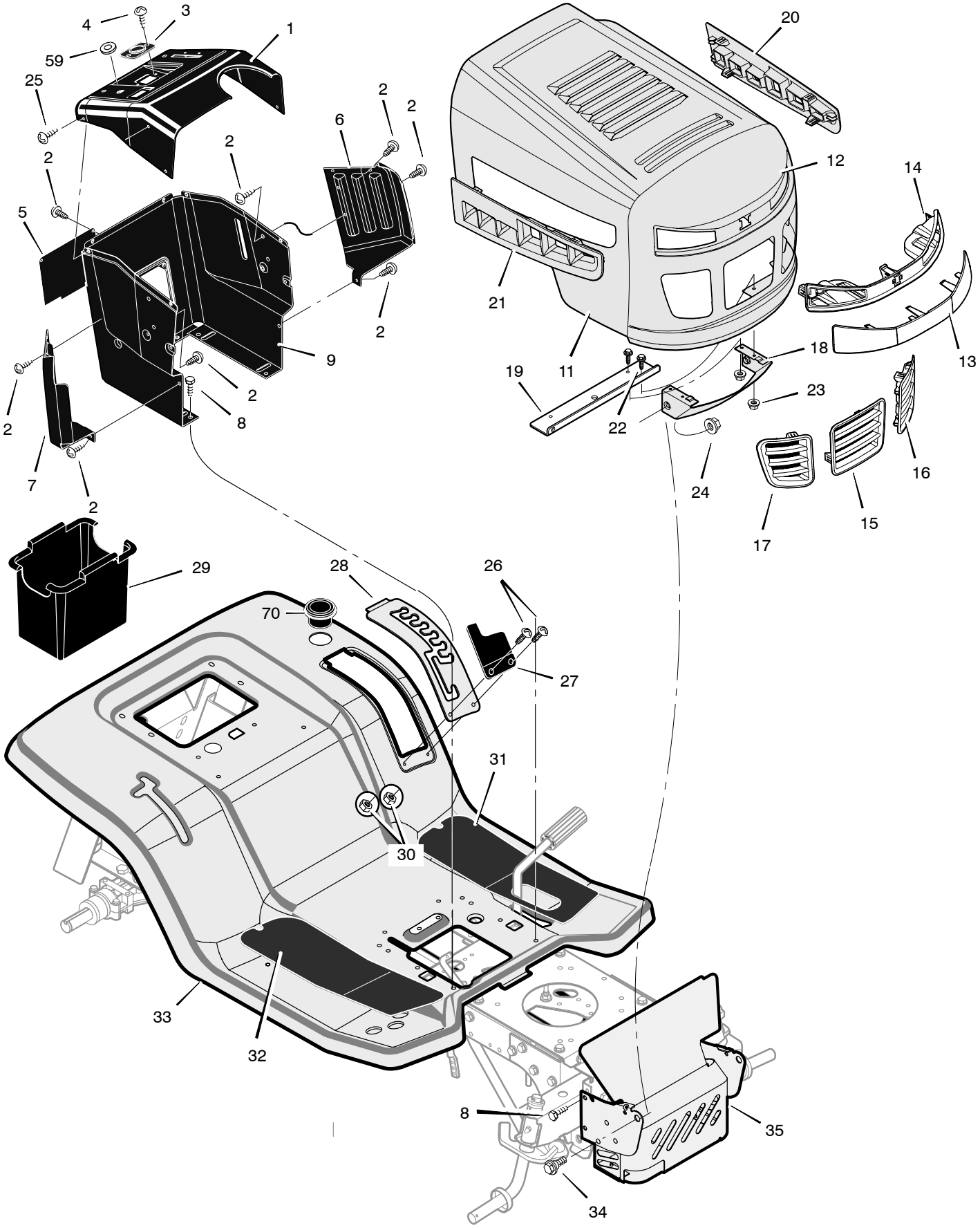

REPAIR PARTS
HOOD AND DASH

Key No.	Part No.	Description
1	1001593E700	Dash
2	26x270	Screw
3	1001491	Bearing, Upper Steering
4	26x238	Screw
5	093007E701	Panel, Access
6	095218	Panel, Left Side
7	095217	Panel, Right Side
8	26x249	Screw
9	095318E701	Support, Dash
11	1001812E201	Hood
12	1001813E201	Grille
13	1001820	Lens
14	1001819	Housing, Light
15	1001816	Insert, Center
16	1001817	Insert, Left
17	1001818	Insert, Right
18	1001799E701	Bracket, Lower Pivot
19	1001921E701	Bracket, Support
20	1001814	Insert, Left Hood
21	1001815	Insert, Right Hood
22	26x263	Screw
23	015x82	Nut
24	15x124	Nut
25	26x201	Screw
26	009x47	Bolt, Shoulder
27	094680	Cover
28	094194E701	Plate, Lift Detent
29	690424	Container, Battery
30	015x81	Nut
31	094383	Mat, Left
32	094382	Mat, Right
33	1001555E700	Deck, Seat
34	009x58	Bolt
35	1001920–701	Shield, Heat
59	1001755	Grommet
70	1001542	Holder, Beverage

MODEL 461004x92A

REPAIR PARTS
MOTION DRIVE

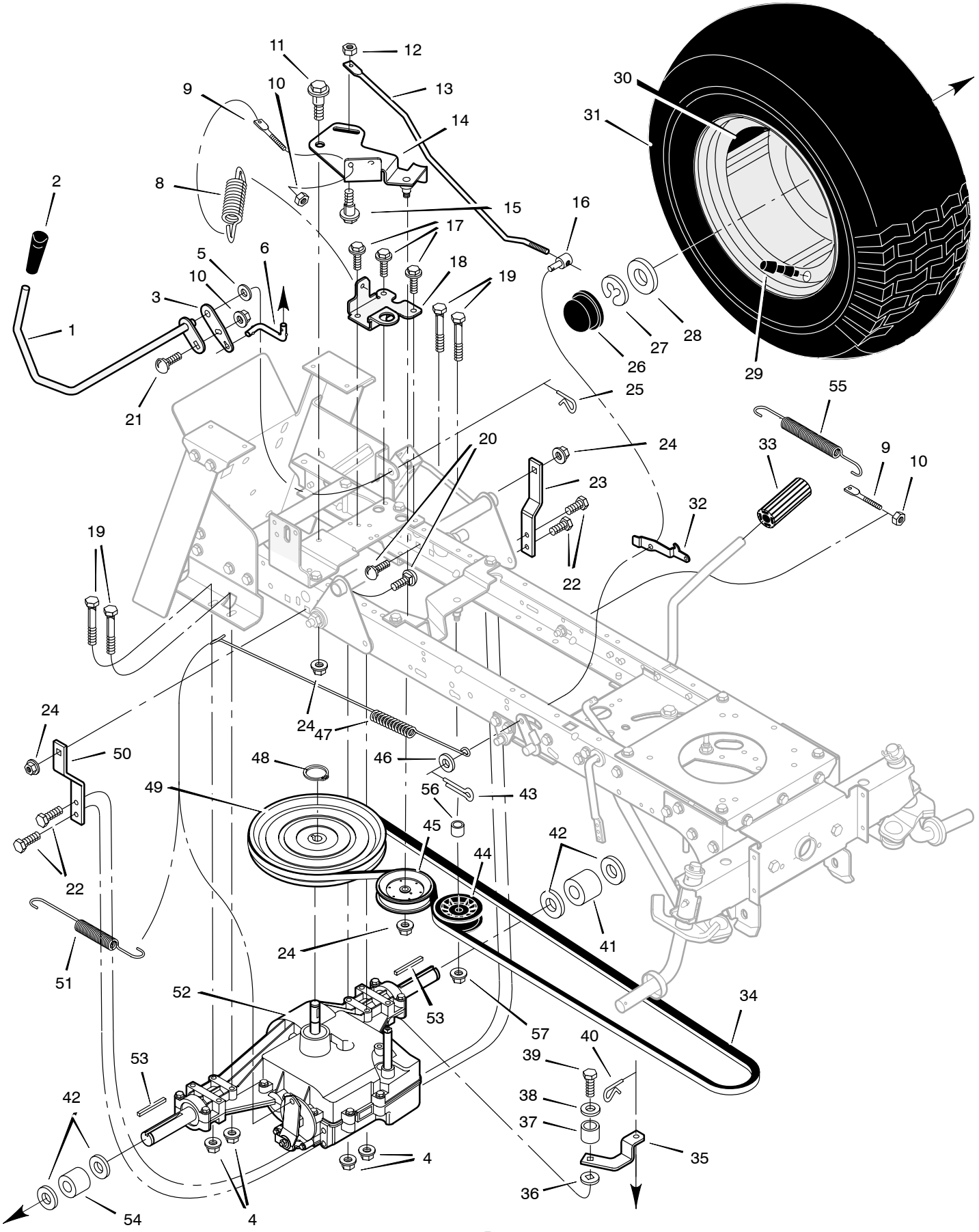

Key No.	Part No.	Description
1	690366 Z	Lever, Shift
2	092697	Grip
3	690131 Z	Plate, Adjusting
4	015x88	Nut
5	17x103	Washer
6	690130 Z	Link, Shift
8	165x116	Spring, Extension
9	094042 Z	Stud, Spring
10	015x79	Nut
11	009x39	Bolt, Shoulder
12	015x89	Nut
13	094041 Z	Rod, Clutch
14	690364 Z	Arm Assembly, Idler
15	009x54	Bolt, Shoulder
16	094815	Nut, Adjusting
17	26x249	Screw
18	690070E700	Bracket, Spring Mount
19	01x155	Bolt
20	002x78	Bolt, Carriage
21	002x53	Bolt, Carriage
22	26x216	Bolt
23	690081E700	Bracket, Left Torque
24	015x84	Nut
25	0031x4	Pin, Hair
26	094618	Cap, Hub
27	011x23	E–Ring
28	17x193	Washer
29	024373	Stem, Valve
30	093263–601	Wheel and Tire
31	091923	Tire *
—	407049	Tube
32	094045 Z	Latch, Parking Brake
33	021544	Pedal
34	037x68	Belt, Drive
35	690129 Z	Yoke, Shift
36	17x148	Washer, Square
37	091889	Pilot, Support
38	017x38	Washer
39	06x105	Capscrew
40	0031x6	Pin, Hair
41	690213 Z	Spacer, Left
42	17x118 Z	Washer
43	030x20	Pin, Cotter
44	690410	Pulley, V Idler
45	023339	Pulley, Backside Idler
46	17x169	Washer
47	165x115	Spring, Brake
48	0011x7	Ring, Retainer
49	690181	Pulley, Drive
50	690080E700	Bracket, Right Torque
51	165x92	Spring, Extension
52	———	Transmission †
53	024039	Key, Square
54	690214 Z	Spacer, Right
55	165x133	Spring, Extension
56	690369	Spacer
57	015x98	Nut

* When you order a tire, make sure to give the brand name of the tire so that the tread pattern on the tire will match.

† For information on Replacement Parts for this transaxle contact the manufacturer.

REPAIR PARTS
SECTOR GEAR

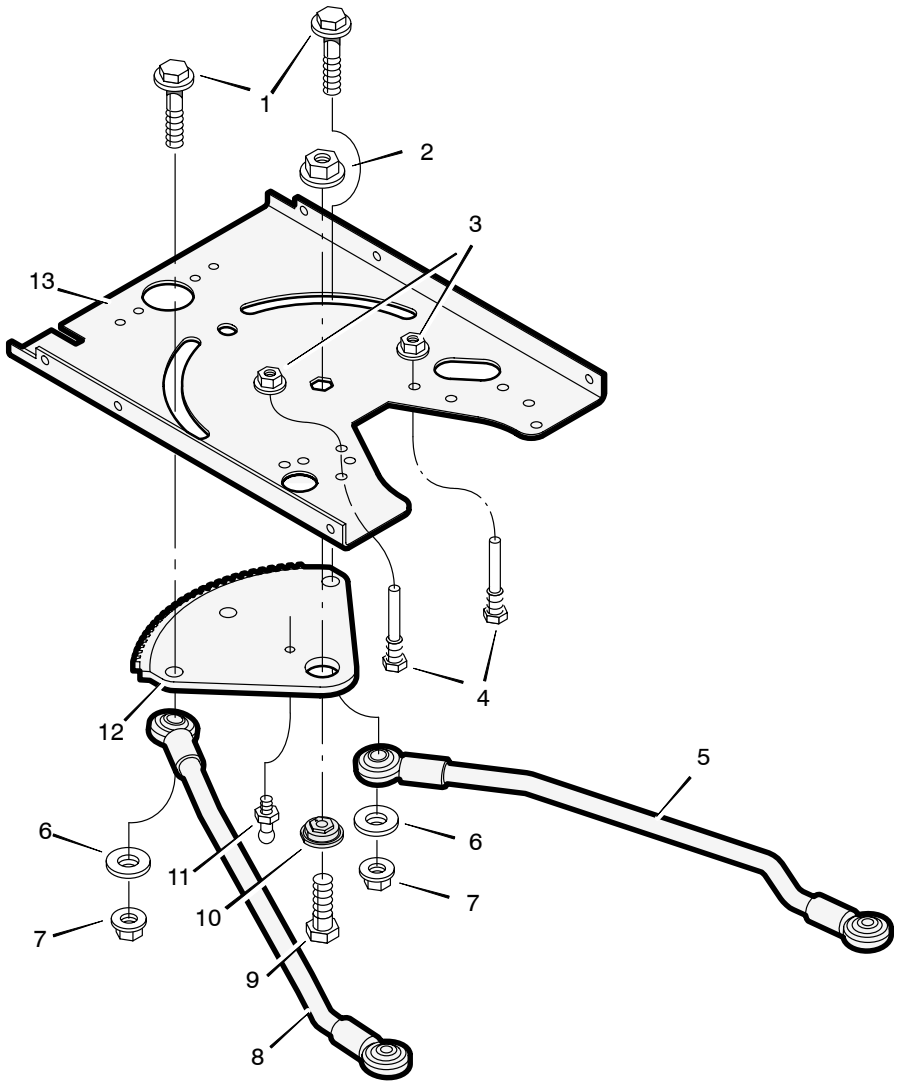

Key No.	Part No.	Description
1	009x62	Bolt, Shoulder
2	15x111	Nut, Lock
3	015x79	Nut, Flange
4	094384	Guide, Screw
5	690146E700	Link, Left Drag
6	17x168	Washer
7	015x84	Nut, Flange
8	690145E700	Link, Right Drag
9	001x84	Bolt
10	690180	Bearing, Sector Gear
11	092530	Fitting, Lub
12	690147	Gear, Sector
13	1001121E700	Plate, Steering

REPAIR PARTS
FRONT AXLE

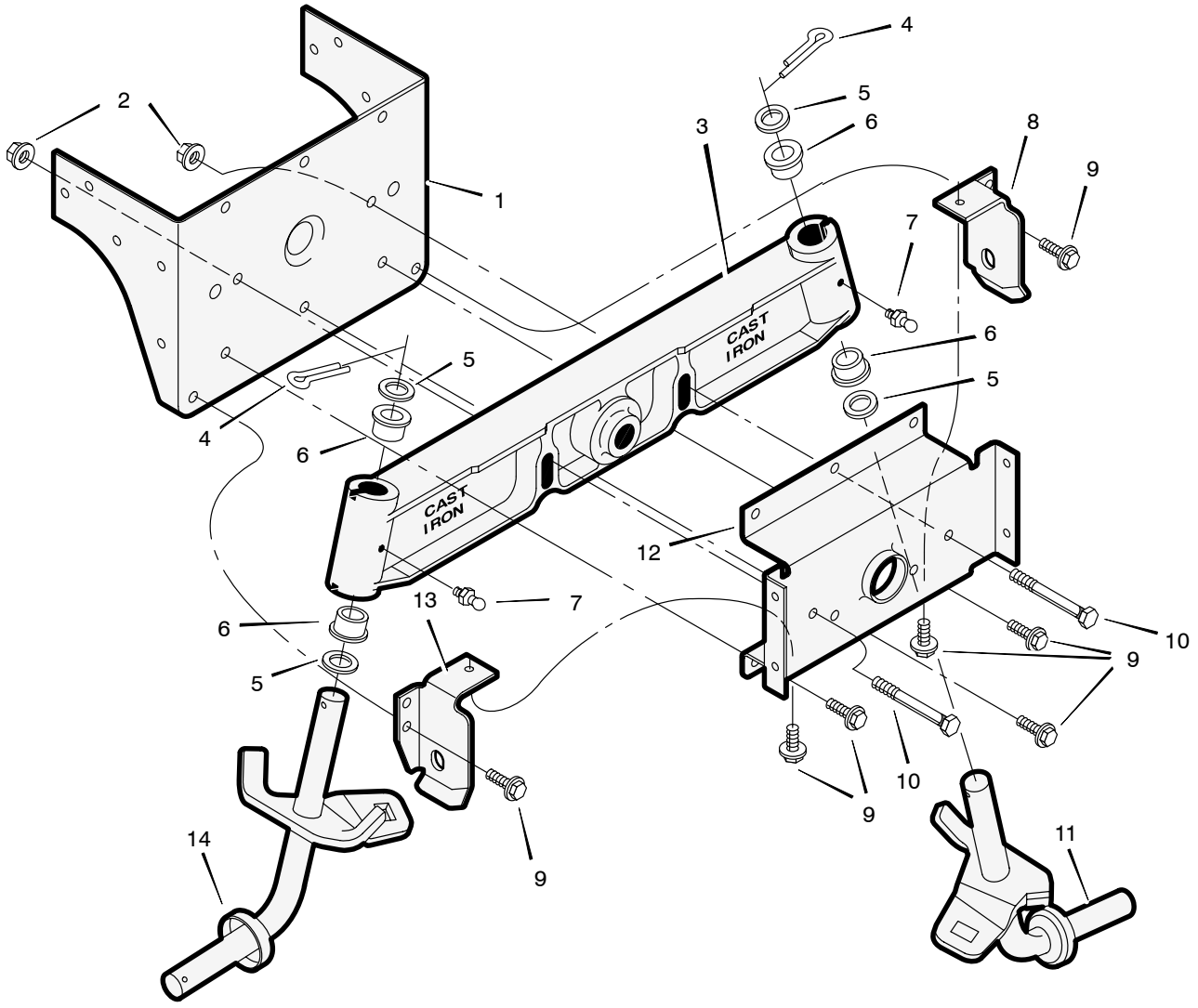

Key No.	Part No.	Description	Key No.	Part No.	Description
1	690067E700	Bracket, Rear Hanger	8	690198E700	Hanger, Left Deck
2	15x118	Nut, Flange	9	26x249	Screw
3	690232E701	Axle Assembly	10	01x146	Bolt
4	030x49	Pin, Hair	11	690179E701	Spindle Assembly, Left
5	017x75	Washer	12	094007E701	Hanger, Axle
6	093058	Bearing, Spindle	13	690199E701	Hanger, Right Deck
7	092530	Fitting, Lub	14	690178E701	Spindle Assembly, Right

MODEL 461004x92A

REPAIR PARTS
FRONT FRAME ASSEMBLY

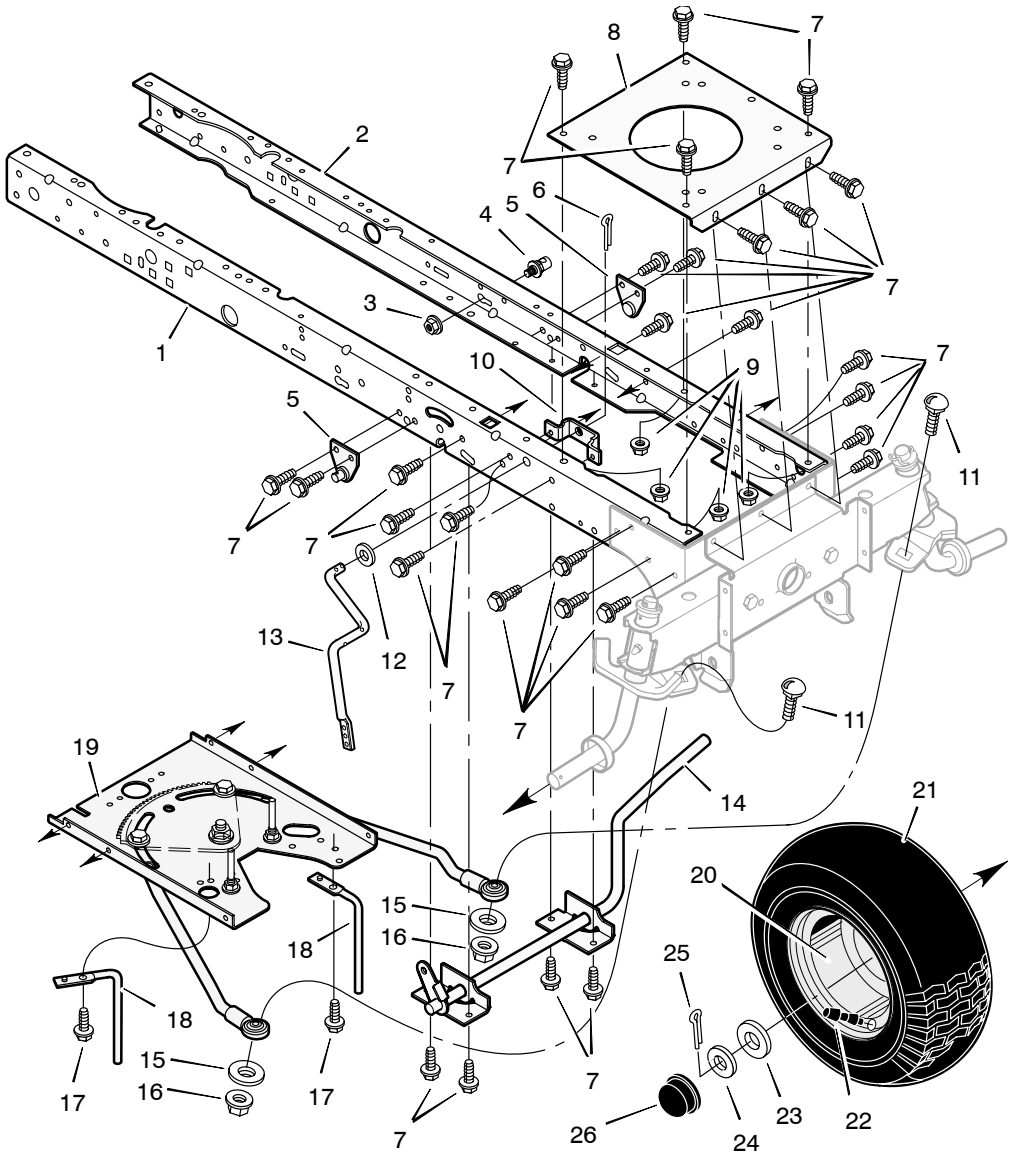

Key No.	Part No.	Description	Key No.	Part No.	Description
1	1001268E701	Frame, Right	15	17x152	Washer
2	1001269E701	Frame, Left	16	015x41	Nut
3	015x84	Nut, Flange	17	025x15	Screw
4	690182	Stud, Swivel	18	690192E701	Guide, Belt
5	690406E700	Bracket Ass'y, Suspension	19	†	Assembly, Steering *
6	030x20	Pin, Cotter	20	092644–601	Wheel & Tire Assembly
7	26x249	Screw	21	024393	Tire *
8	094006E701	Plate, Engine	—	407049	Tube
9	015x88	Nut	—	093604	Bearing, Wheel
10	094005E700	Bracket, PTO Crank	22	024373	Stem, Valve
11	002x87	Bolt, Carriage	23	17x194	Washer
12	017x57	Washer	24	17x114	Washer
13	690394E701	Crank, PTO	25	030x49	Pin, Cotter
14	094038E700	Lever, Brake/Clutch	26	094618	Cap, Hub

* When you order a tire, make sure to give the brand name of the tire so that the tread pattern on the tire will match.

† See the Sector Gear Repair Parts page.

REPAIR PARTS
REAR FRAME ASSEMBLY

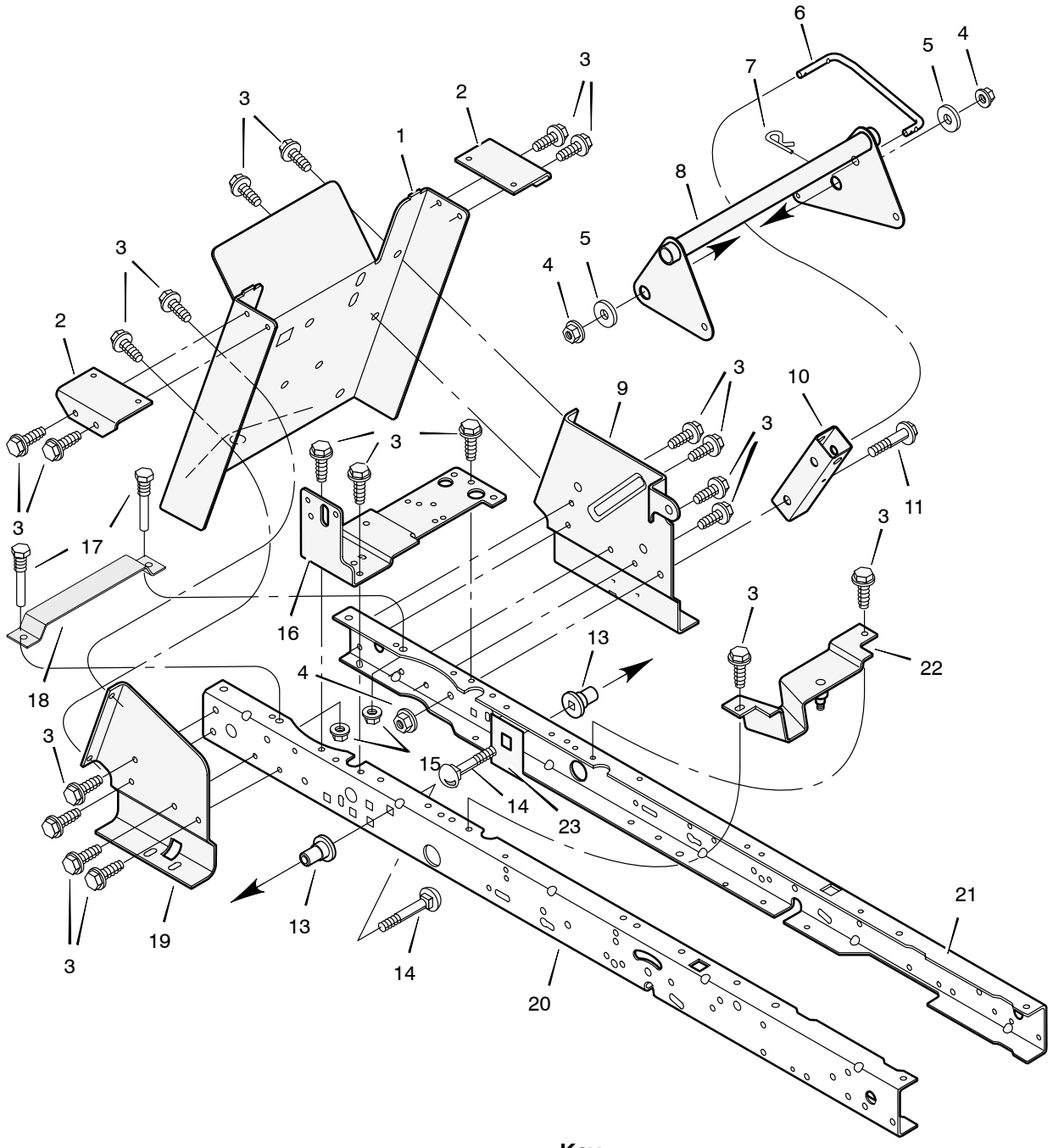

Key No.	Part No.	Description
1	690094E701	Frame, Rear Hitch
2	690077E700	Bracket, Seat Deck
3	26x249	Screw
4	015x84	Nut, Flange
5	17x168	Washer
6	690122E700	Link, Lift Handle
7	0031x4	Pin, Hair
8	1001111E701	Assembly, Lifter
9	1001691E700	Bracket, Left Transaxle
10	094015E700	Bracket, Lift Pivot
11	009x53	Bolt, Shoulder

Key No.	Part No.	Description
13	690151	Spacer, Lifter
14	002x85	Bolt, Carriage
15	015x79	Nut, Flange
16	1001302E701	Bracket, Right Shift
17	094384	Screw, Guide
18	690482E701	Support, Battery
19	690064E700	Bracket, Right Transaxle
20	1001268E701	Frame, Right
21	1001269E701	Frame, Left
22	690365 Z	Bracket, Idler
23	1001098E701	Plate, Stiffening

MODEL 461004x92A

REPAIR PARTS
ENGINE MOUNT ASSEMBLY

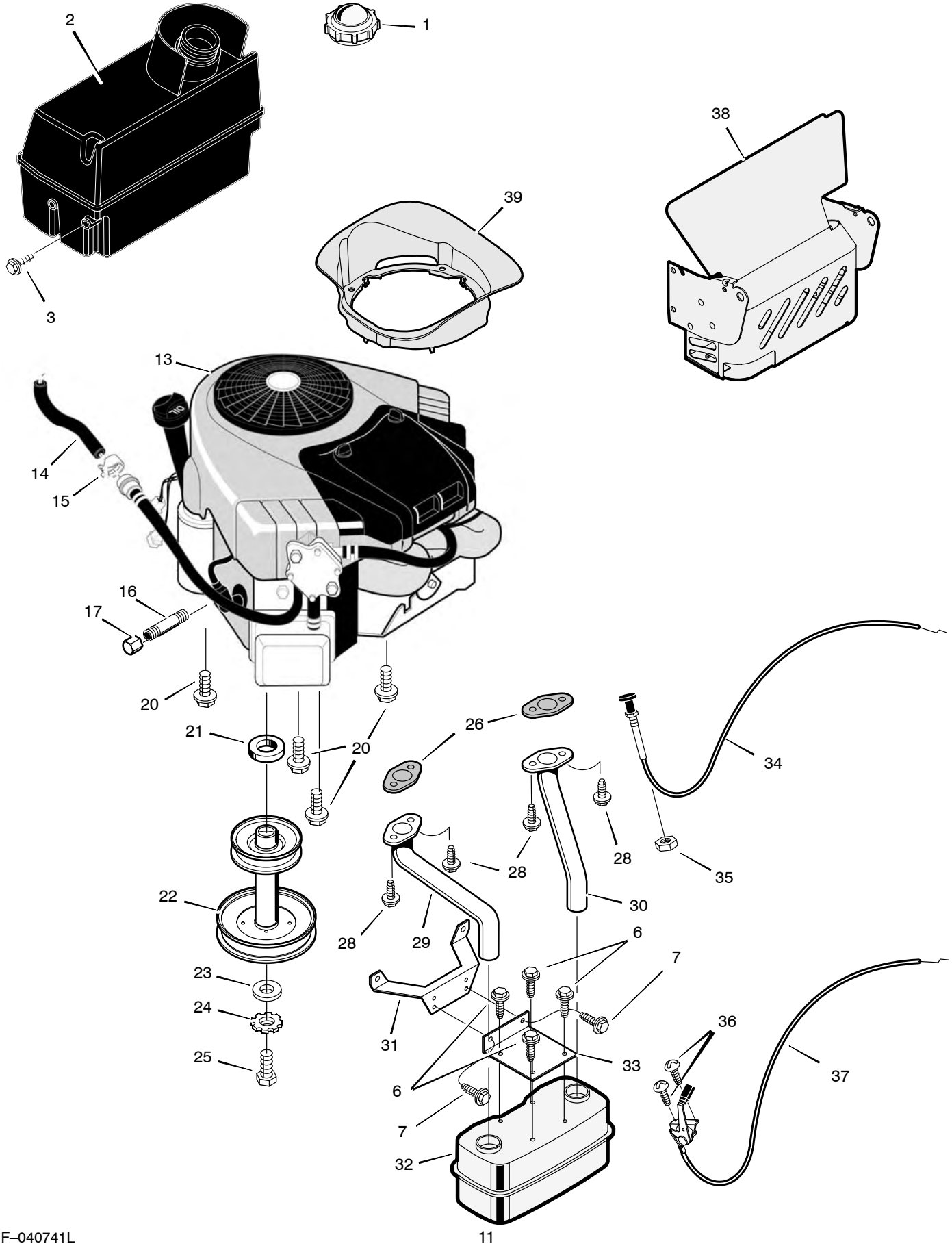

REPAIR PARTS
ENGINE MOUNT ASSEMBLY

Key No.	Part No.	Description
1	092317	Cap, Fuel **
2	690289	Tank, Fuel
3	26x253	Screw
6	26x229	Screw
7	26x213	Screw
13	*	Engine *
14	7601033	Line, Fuel (18 inches long) **
15	095197	Clamp **
16	092279	Pipe, Oil Drain
17	021651 Z	Cap, Oil Drain
20	0025x7	Bolt
21	093077	Spacer
22	690225	Pulley, Stack
23	17x170	Washer
24	019x35	Lockwasher
25	01x140	Bolt
26	711851	Gasket
28	06x103	Bolt
29	690541	Tube, Right Exhaust
30	690542	Tube, Left Exhaust
31	690537E700	Bracket, Muffler Mounting
32	093259	Muffler
33	690538E700	Bracket, Muffler
34	690401	Choke
35	015x68	Nut
36	26x201	Screw
37	093165	Control, Throttle
38	1001920–701	Shield Assembly, Heat
39	1001588	Plenum

* For information on Replacement Parts for this engine contact the manufacturer.

** These parts are included with Key number 2.

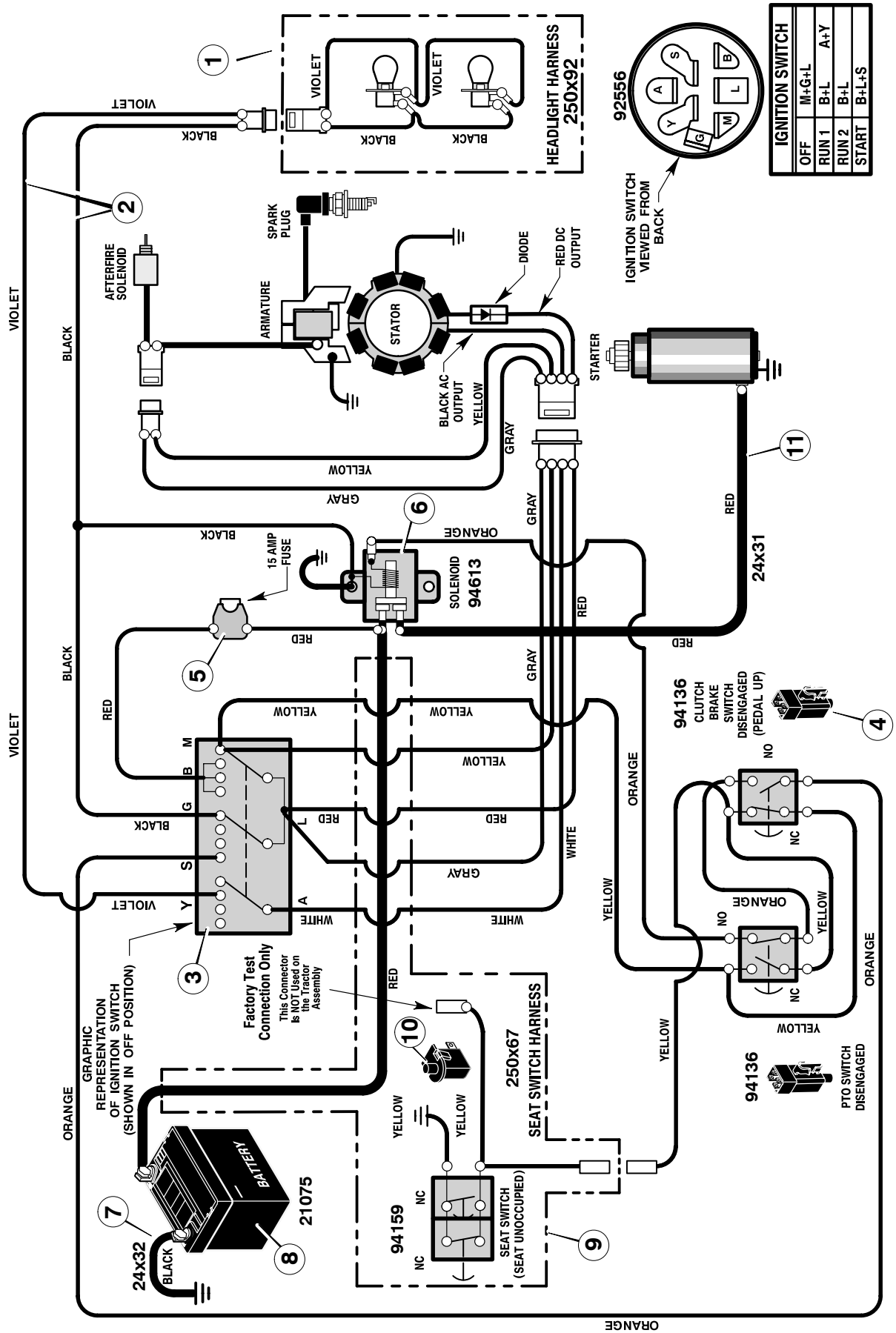

MAIN HARNESS: 250x117
REAR HARNESS: 250X67
LIGHT HARNESS: 250X92

Key No.	Part No.	Description
1	250x92	Harness, Light Wire
	1001716	Socket, Light
	090084	Bulb, Light
2	250x117	Harness, Chassis Wire
3	092556	Switch, Ignition
	020729	Key, Ignition
	091489	Nut, Hex
	091488	Cap, Ignition
4	094136	Switch, Limit
5	302031	Fuse
	407078	Holder, Fuse
6	094613	Solenoid
	26x229	Screw, Mounting
	15x116	Locknut
7	024x32	Cable, Battery Ground
	26x229	Screw, Ground Cable
8	021075	Battery
	002x82	Bolt, Carriage
	014x79	Wingnut
9	250x67	Harness, Seat Switch Wire
10	094159	Switch, Seat Sensor
11	024x31	Cable

REPAIR PARTS
MOWER HOUSING SUSPENSION

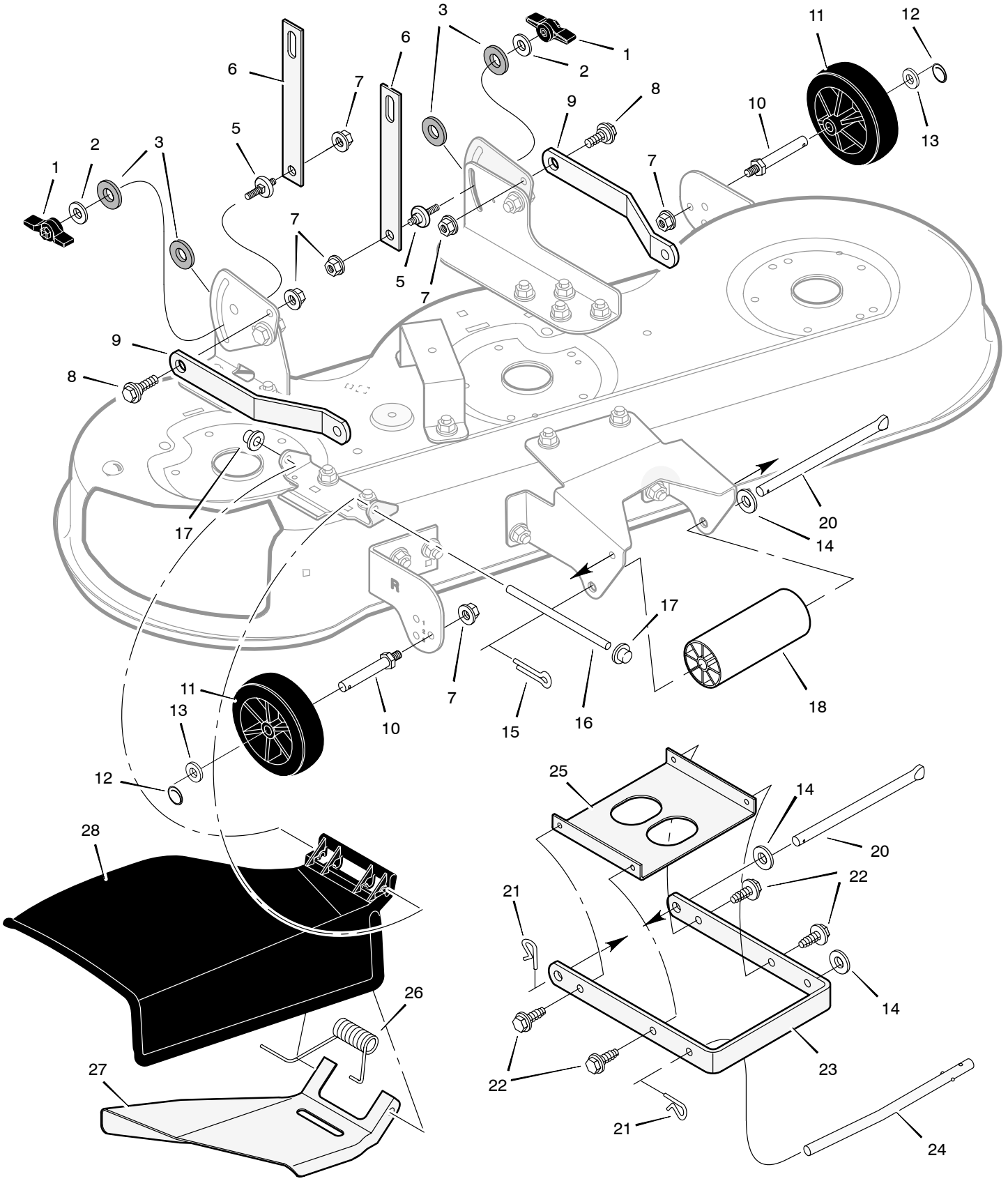

REPAIR PARTS
MOWER HOUSING SUSPENSION

Key No.	Part No.	Description
1	094068	Knob
2	017x45	Washer
3	094137	Pad, Friction
5	095194	Pin, Hanger
6	690550E701	Link, Lift
7	015x84	Nut, Flange
8	009x52	Bolt, Shoulder
9	690578E701	Bracket, Rear Suspension
10	094025	Bolt, Gauge Wheel
11	092683	Wheel
12	031x11	Pin, Hair
13	017x91	Washer
14	17x103	Washer
15	030x49	Pin, Cotter
16	092159 Z	Rod, Deflector
17	028x23	Push–On Cap
18	1001252	Roller
20	094996	Rod, Deck Suspension
21	0031x4	Pin, Hair
22	26x249	Screw
23	094765E700	Bracket, Front Suspension
24	094158 Z	Rod, Hanger
25	094604E700	Stiffener
26	166x34	Spring
27	092103E701	Deflector, Inside
28	092100	Deflector, Chute

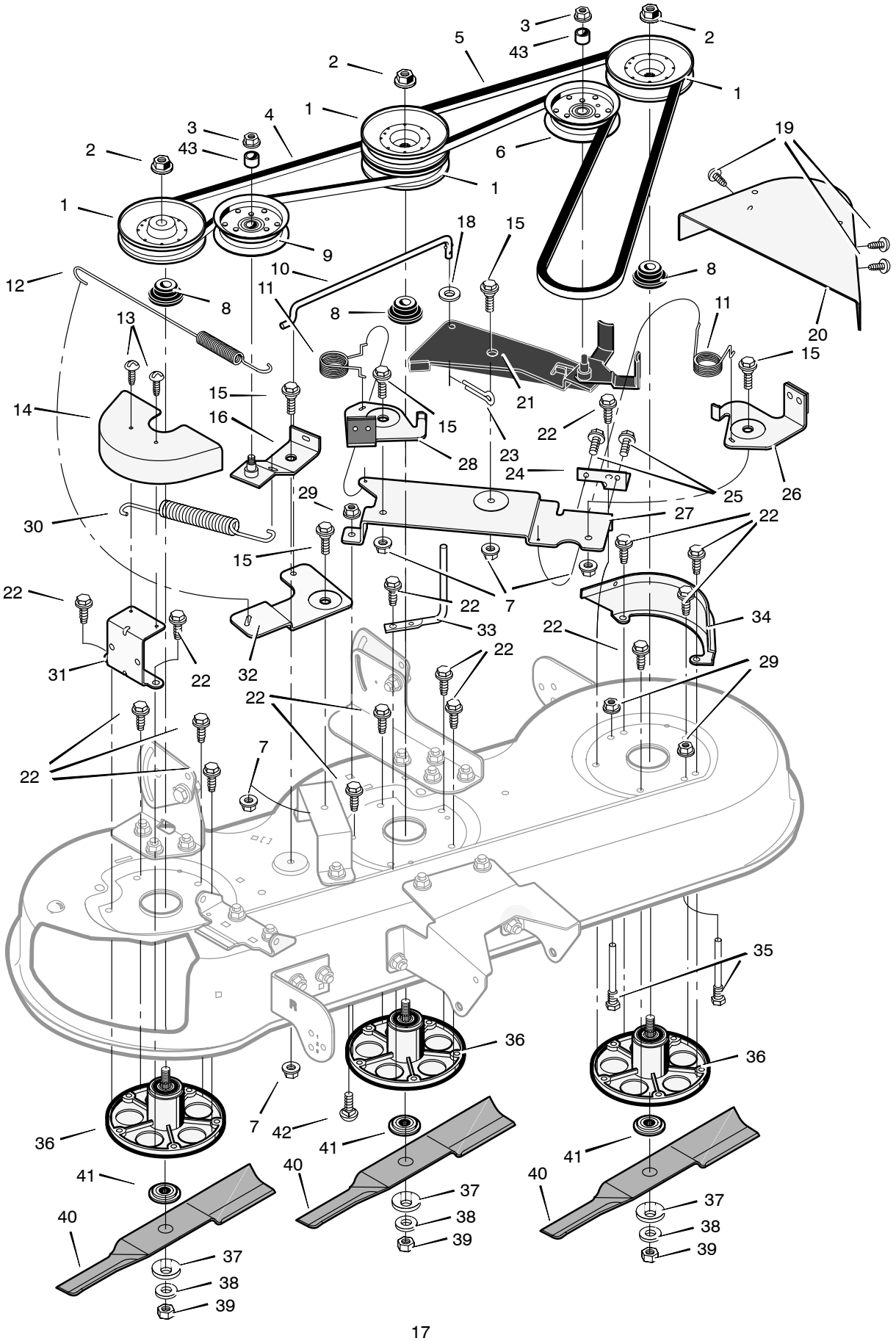
1
2
3
4
5
6
7
8
9
10
11
12
13
14
15
16
18
19
20
21
22
23
24
25
26
27
28
29
30
31
32
33
34
35
36
37
38
39
40
41
42
43

Key No.	Part No.	Description
1	094592	Pulley
2	15x140	Nut
3	015x98	Nut
4	037x66	Belt, Secondary
5	037x96	Belt, Primary
6	690387	Pulley, Idler
7	015x84	Locknut
8	1001197	Spacer, Pulley *
9	690549	Pulley, Idler
10	094606 Z	Link, Bell Crank
11	166x41	Spring
12	165x138	Spring
13	26x270	Screw
14	094607E701	Cover, Right Pulley
15	009x39	Bolt, Shoulder
16	094639E701	Arm Assembly, Idler
18	017x47	Washer
19	26x277	Screw
20	094645E701	Cover, Left Pulley
21	690579E700	Arm Assembly, Idler
22	0025x7	Bolt
23	030x20	Pin, Cotter
24	094602E701	Bracket, Brake Plate
25	26x249	Screw
26	094640E700	Brake Assembly, Left
27	094596E700	Plate, Brake Arm
28	094641E701	Brake Assembly, Center
29	015x79	Nut, Flange
30	165x79	Spring
31	092140E701	Bracket, Cover
32	094603E701	Bell Crank
33	092116 Z	Guide, Belt
34	690221E701	Bracket, Pulley Cover
35	091754	Guide, Belt
36	1001200	Ass'y, Jackshaft Housing
37	17x166	Washer
38	17x165	Washer
39	15x100	Nut, Blade
40	056631E701	Blade
41	690411	Adapter, Blade
42	002x53	Bolt, Carriage
43	690369	Spacer

* Included with Key 36.

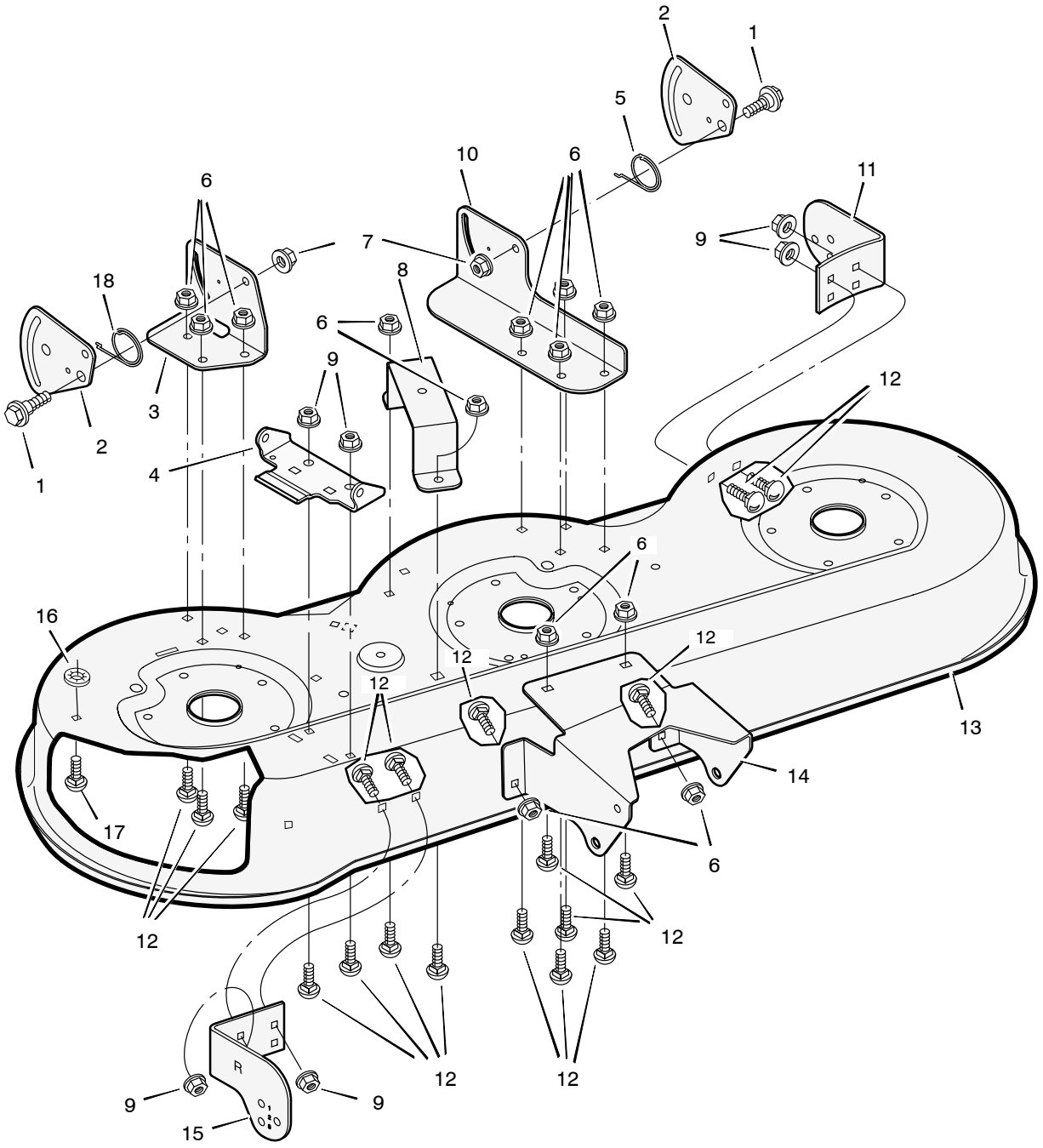

Key No.	Part No.	Description
1	009x51	Bolt, Shoulder
2	690128E701	Plate, Suspension
3	094598E700	Bracket, Right Rear
4	092104E700	Bracket, Hinge
5	166x43	Spring, Left
6	015x79	Nut, Flange
7	015x84	Nut, Flange
8	094601E701	Bracket, Bell Crank
9	015x88	Nut, Flange
10	094600E700	Bracket, Left Lifter
11	094919E701	Bracket, Left Gauge Wheel
12	002x53	Bolt, Carriage
13	690204E701	Housing, Blade
14	094997SE	Bracket, Front Deck
15	094918E700	Bracket, Right Gauge Wheel
16	028x64	Retainer
17	002x74	Bolt, Carriage
18	166x42	Spring, Right
—	776111	Complete Mower Housing